# CPLED-40W 40W LED Canopy

| | |
|---|---|
| Project: | |
| Type: | |
| Catalog #: | |

c UL us LISTED E495046

DLC QPL LISTED PREMIUM

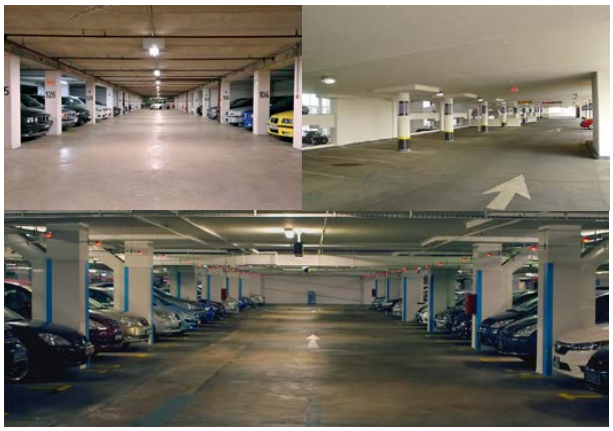

## P/N: CPLED-40WAANA1-aaK

Note:
PG02 = Product series, LED Parking Garage Light
40W = Rating Power, 40W
The first A = Hongli 2835
The second A = Diffuser cover type, A represent Stripe PC cover
N = The lens have no reflector
A1 = Version number
aaK = CCT, 40K=4000K, 45K=4500K,
50K=5000K, 57K=5700K

## DIMENSIONS

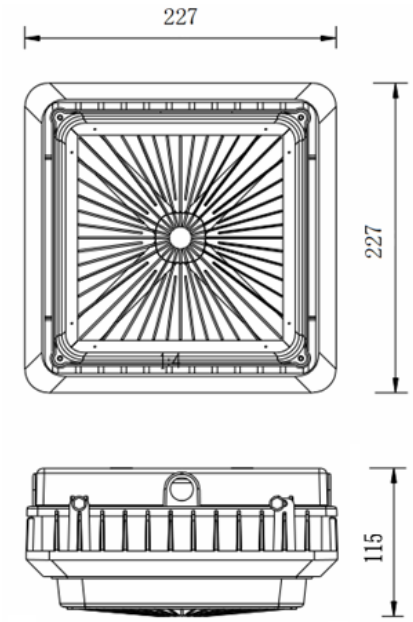


## ADVANTAGE

- UL cUL DLC certificate.
- IP65 Internal driver, Input voltage 100-277Vac.
- Output constant current lever can be adjusted through output cable with 0-10V.
- No UV or IR in the beam.
- Easy to install and operate.
- Energy saving, Long lifespan.
- Light is soft and uniform, Safe to eyes.
- Instant start, NO flickering, NO humming.
- Green and eco-friendly without mercury.

## APPLICATION

- Widely used in underground parking lot, garage and so on..

LED AREA LIGHTS

**Specifications Subject To Change Without Notice**